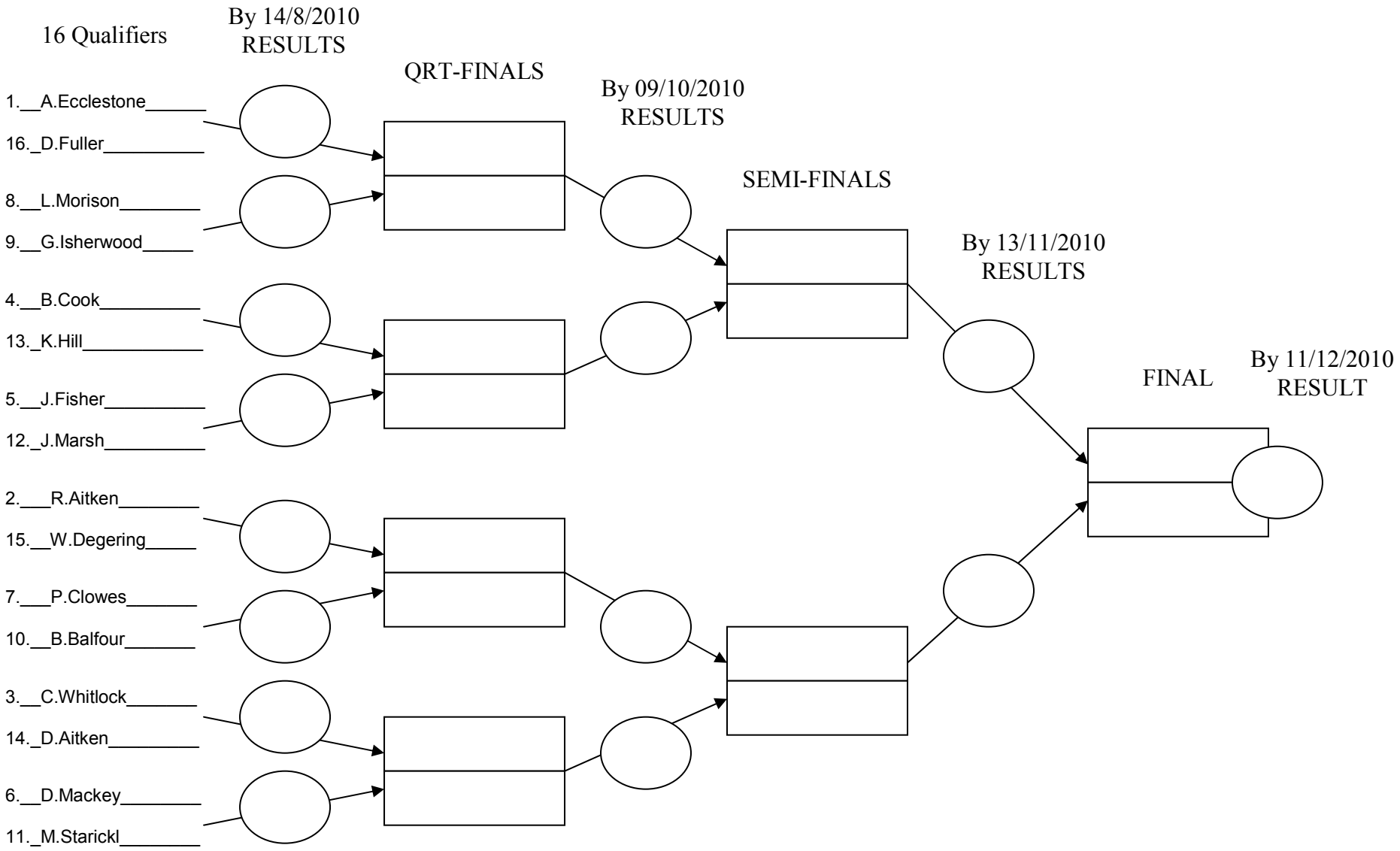EMERALD MATCHPLAY CHAMPIONSHIPS 2010